CHAPTER 5

Rethinking the Construction Slopes of the True Pyramid

1. The Step Pyramid of the Third Dynasty and the Problem of Construction Slopes

The literature on pyramid construction contains a vast number of hypotheses concerning the ramps used to transport stone. Yet before discussing the geometry of any ramp system, one must address a more fundamental issue: the provision of adequate working space for masonry. Many earlier theories, in my view, fail precisely because they overlook this essential requirement.



Fig. 5-1. The Step Pyramid of King Djoser (photographed in 2008).
The two tourists visible at the lower right are standing considerably closer to the camera than the monument itself; the actual height of the pyramid is 62 m.

Let us begin with the Step Pyramid of the Third Dynasty, which is often assumed—intuitively but incorrectly—to provide natural working terraces simply because of its stepped form. It is true that each step forms a terrace roughly ten meters wide. However, the very name "step pyramid" is misleading. Although the monument appears stepped from a distance, it rises to a height of 62 meters and consists of six stages. Each stage is therefore approximately ten meters high, with some exceeding that height. Seen up close, each "step" is not a stair but a sheer cliff face.

The masonry of the Step Pyramid consists of inward-leaning blocks approximately 25 cm high and 30–80 cm wide. Because inward-leaning masonry is built from the center outward, the outermost face is completed last. To place stones on an exterior face ten meters above the terrace below, workers would have required scaffolding, not merely a ramp. In other words, a ramp alone could not have provided the working platform necessary for setting the outer stones.



Fig. 5-2. Remains of the ancient mudbrick scaffolding preserved on the rear side of the First Pylon at Karnak (photographed in 2008).
The mudbrick retaining wall in the foreground is likely a modern intervention intended to prevent ancient bricks from collapsing onto the tourist pathway.

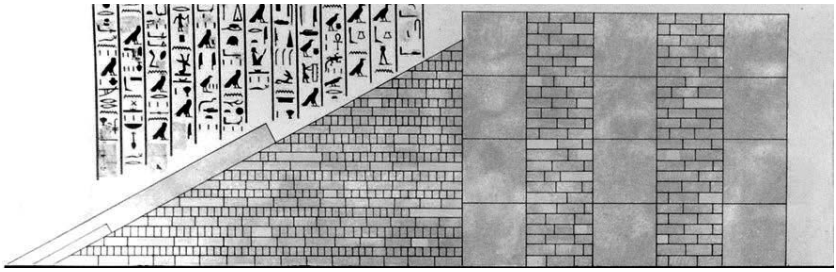

Fig. 5-3. Mudbrick construction ramp depicted in a wall painting. (After Karl Richard Lepsius, Denkmäler aus Aegypten und Aethiopien, 1849–1859, Abteilung III, Blatt 40.)

When I visited the site in 2008, scaffolding for restoration work had indeed been erected along the stepped faces. The ten-meter terraces contribute useful space for constructing such scaffolding, but the scaffolding itself must surround the exterior of the masonry core. The terraces alone do not eliminate the need for it.

As noted in Chapter 1, ancient Egyptian builders preferred mudbrick scaffolding over wooden frameworks. Mudbrick was easier to produce, and for supporting the placement of heavy stone blocks, it provided a far more stable structure. Large quantities of mudbrick debris have been recorded at unfinished Third Dynasty pyramids, and although from a later period, the rear of the First Pylon at Karnak still preserves mudbrick scaffolding from an abandoned construction phase. These examples strongly suggest that mudbrick scaffolding was the standard method for creating elevated working platforms.

A similar example—also from the New Kingdom—appears in the tomb of Rekhmire at Luxor, where a wall painting depicts the construction of a mudbrick ramp. What struck me as particularly fascinating is that the method of laying the bricks in this relief is identical to the technique used in the modern mudbrick retaining wall shown earlier in Fig. 5-2, which was likely built in recent years to prevent ancient bricks from collapsing onto the tourist pathway.

The continuity is remarkable: even after 2,500 years, mudbrick has

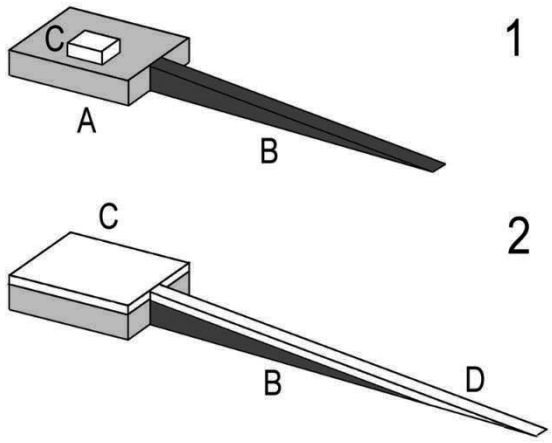

Fig. 5-4. Conceptual diagram of a simple construction ramp.

survived as a viable construction material, and the technique of laying it has remained essentially unchanged. This persistence of both material and method left a strong impression on me.

Among the many hypotheses proposed for pyramid-construction ramps, the most straightforward is the single, linear ramp. Such simple ramps were in fact built in antiquity, and traces of a straight ramp connecting the Giza Plateau to the Nile riverbank have been identified archaeologically.

However, for a structure like a pyramid—whose height increases continuously as construction progresses—a simple ramp soon encounters practical limitations.

In Fig. 5-4 (1), ramp B is shown delivering stone to construct structure C atop foundation A. Once C is completed and work begins on the next level, the ramp must be extended upward to match the new height. This produces ramp D, essentially an enlargement of B.

In Fig. 5-4 (2), the slope angle has been kept constant for clarity, resulting in a dramatically lengthened ramp. In reality, the builders may have increased the gradient to prevent the ramp from becoming excessively long. Even so, raising the ramp each time the pyramid grew taller would have been a major construction project in its own right.

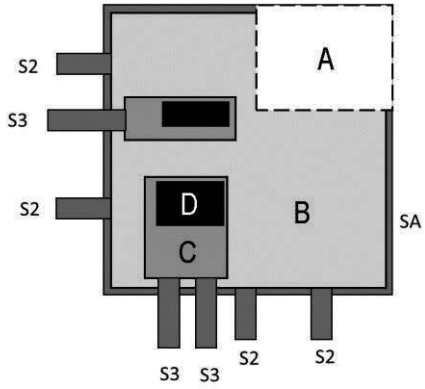

Fig. 5-5. Simple ramp in early construction phase.

That said, during the earliest stages of pyramid construction—when the structure was only about ten meters high—the required ramp length would not have been prohibitive. Because the lower courses of a pyramid require the greatest volume of stone, constructing multiple simple ramps or a single, very wide ramp for high-throughput transport would have been entirely rational in the initial phase of building.

Fig. 5-5 illustrates a hypothetical scenario in which a simple linear ramp is employed during the earliest stages of pyramid construction. In this diagram, A represents the area where the bedrock is still being leveled in preparation for the first course; B, C, and D correspond to the masonry of the first, second, and third courses, respectively. S1 denotes the scaffolding for casing-stone installation, while S2 and S3 represent the ramps used for work on the second and third courses.

This arrangement offers a significant advantage: provided that a sufficient stockpile of stone has been secured in advance, the first three courses can be built in parallel. For the lower levels of a pyramid—where the base area is large and the volume of stone required is greatest—such parallelization may have been an effective means of shortening the overall construction time.

A practical method for preventing a straight ramp from becoming excessively long is the use of a switchback ramp, or zigzag ramp. This is

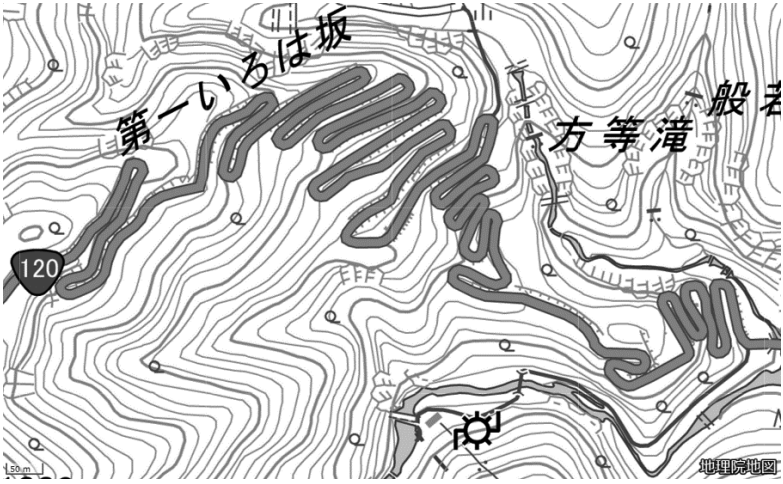

Fig. 5-6. The First Irohazaka Road in Nikko, a classic example of a hairpin (switchback) mountain road, as shown on a GSI topographic map. (Geospatial Information Authority of Japan)

the same principle employed in mountain roads that climb steep passes—Japan's Irohazaka at Nikkō is a well-known example. When space is limited yet a gentle gradient must be maintained, the switchback configuration provides an effective solution.

Other proposals include constructing radial ramps, but a common shortcoming of most traditional ramp theories is that they fail to consider the working space required for setting the outer masonry. The scaffolding needed for masonry work and the ramps used for transporting stone must be conceived as separate structures.

However—and this, I believe, reflects the very design philosophy behind the Step Pyramid—the terraces of the monument are approximately ten meters wide. Even if five meters are allocated to working scaffolds (shown in black), an additional five meters remain unused. This remaining width could easily have accommodated a ramp ascending from one terrace to the next (shown in white).

In such a configuration, the scaffolding and the ramp could be constructed simultaneously, making the system highly efficient. There

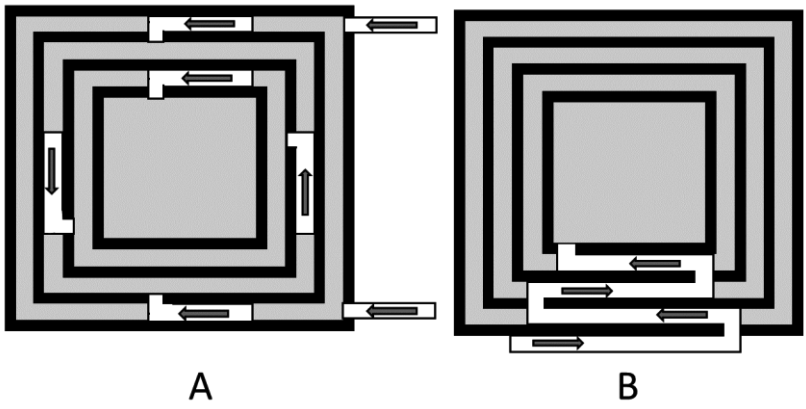

Fig. 5-7. Plan view illustrating how the terraces of the Step Pyramid could have been used to construct switchback ramps on each level.

would have been no need to build a massive, independent ramp like the one illustrated in Fig. 5-7; the surplus terrace space itself could function as the foundation for the ramp. The design freedom for such ramps is considerable, and multiple configurations are conceivable.

Fig. 5-7B presents one such possibility: a switchback (zigzag) ramp constructed along the terraces.

2. Conditions Differ in the True Pyramid

King Sneferu, founder of the Fourth Dynasty, transformed the Step Pyramid at Meidum into a true pyramid by adding masonry to its exterior. In a step pyramid, the terraces allow the simultaneous construction of scaffolding and ramps, but a true pyramid presents a fundamentally different situation: its exterior forms a continuous inclined surface, and the terrace structure no longer exists. Surprisingly, this crucial distinction has rarely been acknowledged in earlier scholarship. Technically speaking, the true pyramid is not a simple extension of the step-pyramid system; its scaffolding and ramp arrangements required an entirely new conceptual approach.

When Sneferu began the conversion, any scaffolding or ramps

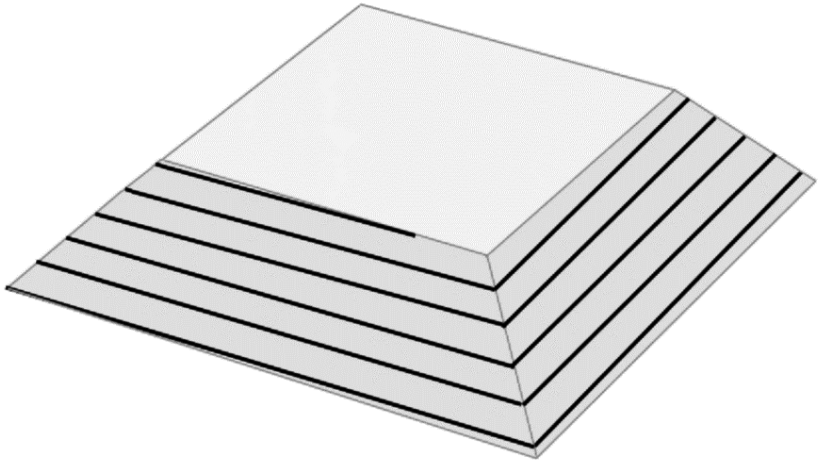

Fig. 5-8. Conceptual illustration of the double-helix loop: mudbrick scaffolding constructed around the outer casing of the pyramid, with a circumferential ramp built around the exterior of the scaffolding.

remaining on the terraces of the original step pyramid would have obstructed the new work. It is therefore reasonable to assume that the earlier installations were dismantled and replaced with new scaffolding and ramps designed specifically for the true-pyramid form.

A key point is that the true pyramid required the placement of casing stones along its outer surface, and these had to be set only after the internal masonry beneath them was complete. Consequently, peripheral scaffolding was indispensable.

If mudbrick scaffolding had already been standard practice during the construction of step pyramids, then erecting scaffolding around the growing mass of the pyramid would not have been an extraordinary task. The real challenge lay in determining how to construct the ramps in coordination with the scaffolding.

As noted earlier, building the scaffolding and the ramp in tandem is highly efficient. One plausible solution is the system illustrated in Fig. 5-8: a spiral ramp encircling the pyramid, built along the outer face of the mudbrick scaffolding. Because this structure consists of a dual system—

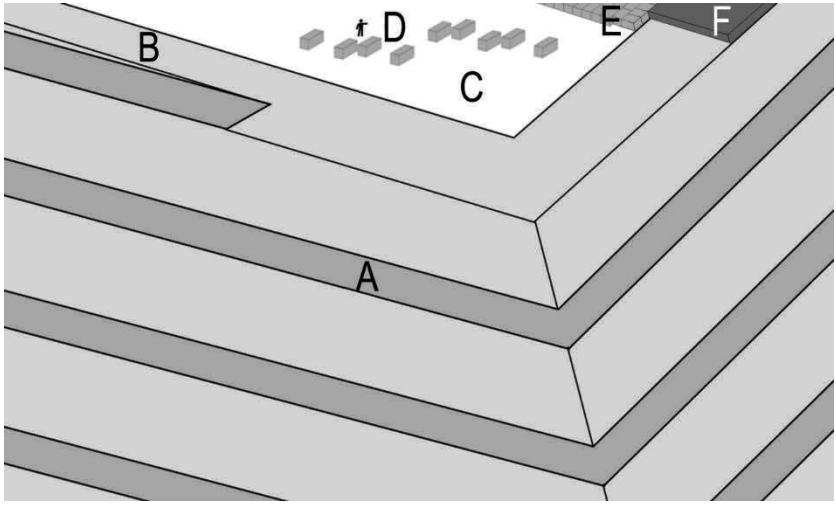

Fig. 5-9. Enlarged view of the terminal section of the double-helix loop.

scaffolding plus a circulation path—I refer to it as a double-helix loop.

Fig. 5-9 presents an enlarged conceptual view of the terminal section of the double-helix loop. In this example, the circumferential ramp (A) is five meters wide, and the working scaffold (B) is likewise five meters wide. At the stage shown here—before the ramp has been constructed—the scaffold temporarily occupies the full ten-meter width of the terrace.

Surface C represents the completed masonry face, which functions as the active construction zone. The diagram makes clear that the foundations of both the scaffold and the ramp wrap around the exterior of the pyramid, forming a continuous envelope of mudbrick.

The human figures and stone blocks labeled D are included to provide a sense of scale, making it intuitively apparent that the quantity of mudbrick required for both the scaffold and the ramp would have been immense.

Area E shows the pyramid after the masonry and casing stones have been fully completed. With the casing in place, the mudbrick structures used for scaffolding and ramping are removed, as indicated at F.



Fig. 5-10. Exposed section of the Bent Pyramid showing the matched heights of core masonry and casing stones, as well as the contrast between the rough-finished core blocks and the finely cut, inward-leaning casing.



Fig. 5-11. Lowest course of the Pyramid of Menkaure, showing the use of red granite: the upper and lower faces are finely dressed, while the exterior faces remain rough-finished with pronounced irregularities.

Examination of the collapsed casing zones of the Bent Pyramid shows that the heights of the casing stones and the core blocks are precisely matched. The same is true at the Pyramid of Menkaure: although the exterior faces of the granite casing blocks remain in a rough, unfinished state, their upper and lower faces are accurately dressed so that their height corresponds exactly to that of the adjacent core masonry.

However, as noted in Column 1 on p. 33, the course heights of pyramid masonry are not uniform. This fact strongly indicates that the casing stones for each course were installed immediately after the core blocks of that course were set. In other words, the construction sequence required the casing to be placed in close synchrony with the core masonry.

Some earlier theories of pyramid construction have proposed that the installation of core blocks and casing stones constituted separate operations. Yet, with the exception of the Meidum pyramid—where a completed step pyramid was later converted into a true pyramid—the monuments of the Fourth Dynasty, from the Bent Pyramid at Dahshur to the Pyramid of Menkaure at Giza, consistently show identical course heights in both core and casing. This provides strong evidence that the casing stones were installed immediately following the completion of each corresponding core course.

Although pyramids of the Fifth Dynasty and later sometimes exhibit discrepancies between the dimensions of core and casing stones, the present discussion concerns the Fourth Dynasty, where the evidence overwhelmingly supports the conclusion that casing installation proceeded in step with the core masonry. The analysis that follows therefore adopts this synchronized construction process as a working premise.

Fig. 5-12 presents a conceptual view of masonry work being carried out on the double-helix loop.

Element A represents the already-set core blocks, and B the casing stones that have been installed. In this stage, the outer faces of the casing stones (B) remain in a rough-finished state, but all other faces are accurately dressed so that the stones fit tightly together. Area C marks the

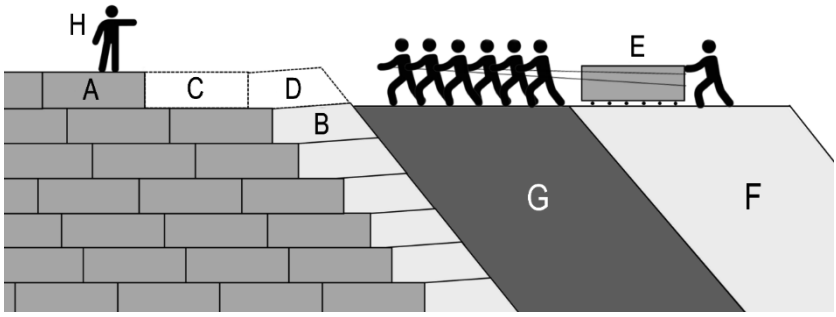

Fig. 5-12. Conceptual view of a pyramid masonry worksite.

location where the next stone (E) will be placed, and D indicates the position where the casing stone will be installed after C has been completed. The ramp is shown as F, and the working scaffold as G. H represents the overseer directing the work.

Although the exterior faces of the casing stones must ultimately be polished to a high degree of precision—as seen in the casing of the Bent Pyramid in Fig. 5-10—this finishing process would have been carried out only after the masonry had reached the summit and the mudbrick scaffolding and ramps were removed progressively from the top downward. Thus, during the active construction phase, both the core blocks and the casing stones would have remained in a rough-finished state, much like the granite casing of the Pyramid of Menkaure shown in Fig. 5-11.

3. Difficulties with the Timber-Scaffolding Hypothesis

Many readers may wonder why such massive mudbrick scaffolding is necessary at all, and may feel that a simple timber framework would suffice. This impression likely stems from popular books on pyramid construction, which frequently depict scenes like Fig. 5-13A, showing a fully formed wooden scaffold.

It was precisely such illustrations that first led me to question the traditional timber-scaffolding hypothesis. Most drawings present only

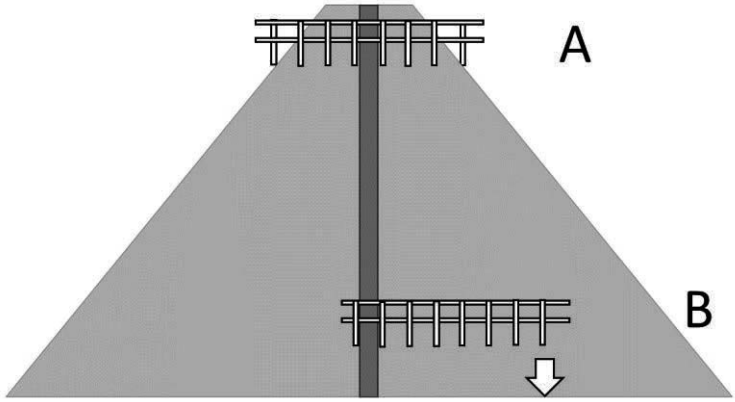

Fig. 5-13. Impracticality of constructing pyramid scaffolding using timber.

the completed structure, as in A. In that idealized state—and using modern materials and techniques—such a scaffold is not entirely impossible: one could assemble a rigid steel-pipe frame on the ground, using proper joints and diagonal bracing, then lift the entire structure by helicopter or crane and lower it into place from above. Even on an unstable slope, a sufficiently rigid steel frame could theoretically withstand the loads.

However, this is not how such scaffolding would be built in reality. The actual construction process would require the scaffold to be extended outward cantilevered, as shown in B—and this method is considered impractical even today. The casing stones of a pyramid provide no footholds for supporting the legs of a scaffold. Extending a timber or pipe structure outward in a cantilevered fashion would impose severe torsional loads at the base. Extending such a structure tens of meters horizontally is simply unrealistic, even with modern engineering.

Some illustrators may have assumed that if the final image looks plausible, the construction process must also be feasible. Others may have realized that the process depicted in B is impossible, yet chose not to draw it—preferring silence over acknowledging the inconvenient truth.

When encountering diagrams like A, one should examine carefully how the base of the scaffold is fixed to the sloping surface, and then

imagine the actual construction sequence. It quickly becomes apparent that such scaffolding cannot be built in reality.

The French architect Jean-Pierre Houdin proposed an internal-ramp theory in 2007 with support from Dassault Systèmes. I do not find this convincing. While the concept may function within a 3D model or theoretical framework, I cannot see how it could sustain a throughput of 500 blocks per day, which is required for real pyramid construction. Moreover, Houdin assumes that casing stones were polished before installation, yet surviving examples contradict this: the Bent Pyramid shows extremely precise finished surfaces, whereas the Pyramid of Menkaure preserves casing stones in a rough-finished state. These observations do not align with his proposed method.

Lighting and ventilation within an internal ramp would also pose serious challenges. I cannot form a plausible mental image of such a system functioning in practice. My concern is not whether a single block could be moved this way, but whether such a method could sustain the daily transport and placement of hundreds of blocks for more than a decade.

4. Sun-Dried Mudbrick for Ramp Construction

It is intuitively clear that constructing not only the ramps but also the working scaffolds from sun-dried mudbrick would have required an enormous quantity of material. To verify this, I carried out a numerical estimate.

The volume V of a truncated square pyramid with upper sides a,, lower sides A,B, and height h is given by:

$$V=h(Ab+aB+2(ab+AB))/6$$

In the case of the Great Pyramid of Khufu, the uppermost masonry has been lost, but the base length is 230 m and the design height is estimated at 146.6 m. If we assume a pyramidion 1 m high with a 1 m square base, then a=b=1 m, A=B=230 m, and the height of the main body becomes

145.6 m. The resulting volume of the pyramid excluding the pyramidion is: 2,578,755 m^3.

If we assume that a 5-m-wide scaffold enveloped the pyramid, the volume of the truncated pyramid including the scaffold becomes 2,917,853 m^3, meaning that the scaffold alone accounts for: 339,098 m^3.

Adding a 5-m-wide ramp around the exterior yields a ramp volume of 188,620 m^3; if the ramp width is increased to 10 m, the volume rises to 392,620 m^3. In the early stages of construction, when the working area per course is large, a 5-m-wide transport path may have been insufficient. However, there is no compelling reason to assume that a 10-m-wide ramp was required all the way to the top. It is more plausible that the ramp gradually narrowed as construction progressed upward.

One exception must be considered: the transport of the massive granite beams used in the ceiling of the King's Chamber. According to Perring's measurements, if the pyramid's height is taken as 146.6 m, the ceiling of the King's Chamber lies at approximately 47 m, or 32% of the total height. The uppermost gabled stones of the stress-relieving structure lie at about 43% of the total height. To transport such enormous beams, a 10-m-wide ramp would have been reasonable at least up to this level.

For these reasons, I adopt the working assumption that Khufu's pyramid required approximately:

340,000 m^3 of mudbrick for scaffolding

340,000 m^3 for ramps

for a total of 680,000 m^3.

In Chapter 1, I assumed a standard mudbrick size of 30 cm × 15 cm × 10 cm, giving a volume of 0.0045 m^3 per brick. Thus, 680,000 m^3 corresponds to: 151 million bricks.

This is an enormous number, but not unmanageable for a state-organized project. If one worker produced 100 bricks per day, then 1,000 workers could produce 100,000 bricks daily. Even limiting production to the seven months of the low-water season, annual output would reach 21 million bricks. At that rate, producing 151 million bricks would require less than eight years, which does not conflict with the

overall construction timeline of the pyramid.

The more serious issue is not the labor of brickmaking but the source of the raw material—the Nile silt deposited by annual inundation. I initially assumed, mistakenly, that the flood would deposit large quantities of fertile soil each year. In reality, the annual deposition is only a few millimeters to a few centimeters. This means that the material removed does not naturally replenish itself at a rate sufficient for large-scale extraction.

When considering where the enormous quantity of mud—680,000 m^3—required for the ramps and scaffolding could have been obtained at Giza, the answer becomes apparent upon examining Khufu Harbor and Khufu Lake.

The lake extends roughly one kilometer east to west, and the contrast in contour-line spacing between its western and eastern sides is striking. What would originally have been a gentle slope, forming a basin during the low-water season, now appears more like the remnant of open-pit extraction, as if large quantities of mud had been quarried from it.

Khufu Harbor itself also shows signs of artificial dredging. This raises an important question: what became of the excavated spoil? Even in

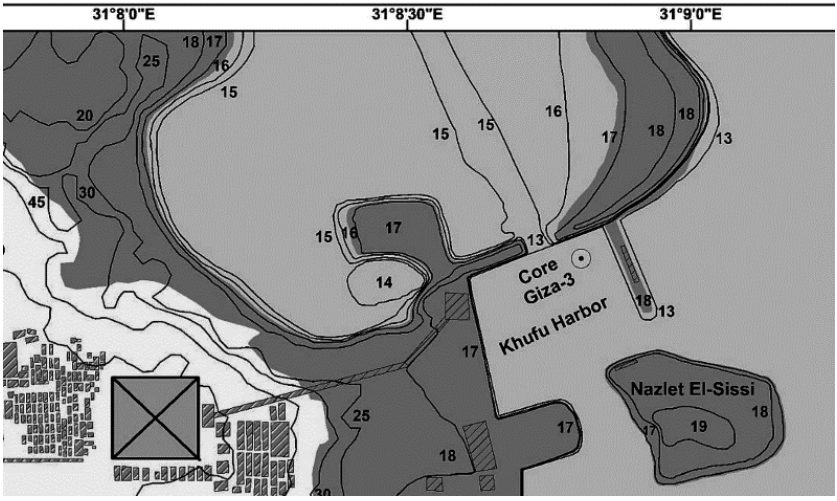

Fig. 5-14. Topography and contour lines of Khufu Harbor and Khufu Lake.

modern civil engineering, the primary challenge is often not the excavation itself—easily accomplished with heavy machinery—but the logistics of spoil disposal. Construction cannot proceed unless a clear plan exists for transporting and depositing the removed material.

Viewed from this perspective, the evidence strongly suggests that:
extraction of mud for sun-dried bricks,
dredging of Khufu Harbor,
excavation of Khufu Lake
were not independent activities. Rather, they appear to have been components of a single, integrated engineering project, planned from the outset as mutually reinforcing operations.

5. Corner Sections of the Circumferential Ramp

By its very nature, a circumferential ramp must turn at nearly right angles at each corner. Whether one attempts to negotiate the curve using rollers or a wooden sledge, significant lateral forces arise, making the maneuver inherently difficult. When workers attempt to turn the load using human pulling force alone, sliding friction develops either between the rollers and the ramp surface or between the rollers and the stone block itself. As a result, the force required to execute the turn becomes far greater than under straight-line motion.

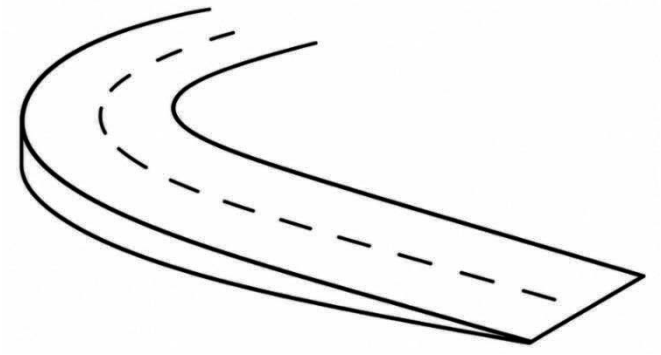

Fig. 5-15. Conceptual illustration of road-curve superelevation (cant).

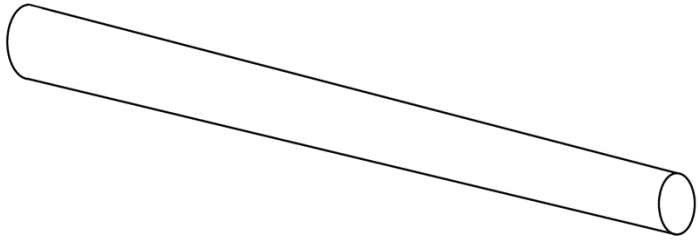

Fig. 5-16. Conceptual illustration of tapered rollers used at ramp corners.

A practical method for reducing these lateral forces is to construct the ramp with a superelevated profile, in which the outer edge is higher and the inner edge lower. This configuration—known as cant—creates a gravitational component that naturally urges the stone inward, making it easier for the load to follow the curve.

Mountain roads with sharp switchbacks employ the same principle: the cant counteracts the outward motion caused by centrifugal force, allowing vehicles to negotiate the curve more safely. The geometry required for the pyramid ramp is analogous.

Another method for facilitating cornering is to shape the rollers themselves as slightly tapered frustums, with the outer side made marginally thicker and the inner side thinner. In such a configuration, the outer circumference travels a longer distance per rotation than the inner circumference, causing the roller to turn naturally toward the inside of the curve.

However, this design inevitably introduces sliding friction and torsional stress within the roller. As a result, the rollers would experience rapid wear. It is therefore likely that tapered rollers were treated as consumable components, intended for short-term use and replaced frequently during operation.

It is also conceivable—though still speculative—that the rollers were divided into two separate units, one for the outer side and one for the inner side. Because these two rollers are not mechanically connected, each can rotate independently, thereby greatly reducing torsional stress.

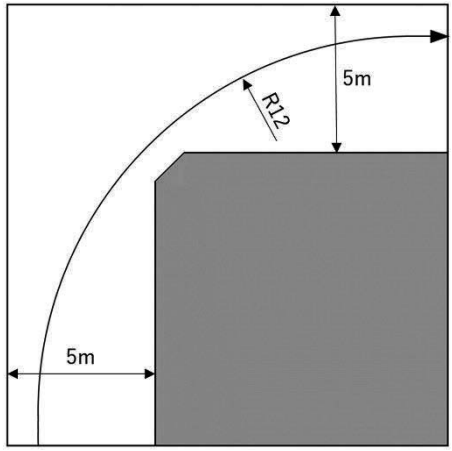

Fig. 5-17. Conceptual view of direction change at a ramp corner.

Although this arrangement would make handling and alignment more complex, the rollers would be easier to transport, and it is possible that such a system was actually employed.

At first glance, one might assume that a 5-meter-wide ramp would require a turning radius of roughly 5 m at each corner. However, even a modest 1-meter chamfer at the inner corner of the scaffold significantly alters the geometry: with this small modification, the load can follow a gentle curve with a radius of approximately 12 m.

Even large core blocks rarely exceed 2 m in length, so a 5-meter-wide ramp would have provided sufficient clearance for the stones to negotiate the corner without difficulty. In practice, the turning radius was therefore far more generous than intuition might suggest, and the circumferential ramp would not have posed an insurmountable obstacle to transporting sizable blocks.

6. Rollers Are Surprisingly Safe on Gentle Slopes

On a gentle slope, it is intuitively easy to understand that stone blocks can be hauled with relatively little effort when rollers are used. At the same time, one might worry that using rollers on a slope could allow a

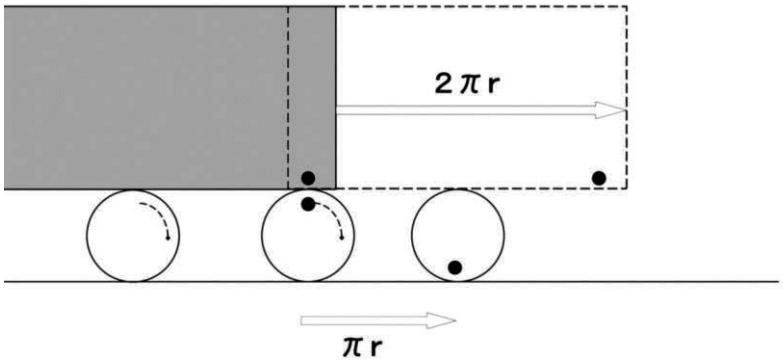

Fig. 5-18. Operation of rollers

block to slip and run uncontrollably downhill due to its own weight. Although such a risk does exist, the operating principle of rollers differs fundamentally from that of wheels, and a block that begins to move downward will not continue accelerating indefinitely.

Fig. 5-18 (reproduced from Fig. 3-6) illustrates the basic mechanics of rollers. When the roller has radius r, the roller advances a distance of πr per rotation, while the stone block advances 2πr. Conversely, if the block has length L, then when the block has moved downward by L, the roller has advanced only L/2. At that point, half of the block has already slipped off the roller, causing one corner of the block to contact the slope surface directly. This contact produces a large frictional force, which brings the block to a stop. Thus, the block cannot continue running downhill indefinitely.

In contrast, when a wooden sledge is used, workers would naturally attempt to reduce static and kinetic friction by spreading sand or water on the ramp surface. On a gentle slope, the block may remain stationary when pulling stops. However, as the slope becomes steeper, the reduced friction means that the block will begin to slide as soon as the pulling force ceases. Once the block overcomes static friction, only kinetic friction remains to resist motion. But the very fact that the block has begun to move indicates that gravity has already exceeded static friction; therefore, kinetic friction is insufficient to stop it. A sliding block will

continue to accelerate, and once it begins to run downhill, it becomes extremely difficult to halt.

In both systems—rollers and sledges—the downslope gravitational component is always present. On steeper slopes, the risk of unintended motion becomes significant the moment pulling stops. For this reason, workers would have needed to employ wedges, functioning like modern wheel chocks, to prevent runaway blocks during transport operations.

7. Considerations on the Method of Setting Stone Blocks

The next issue concerns the final stage of stone transport—how the block was removed from the rollers and placed precisely at its intended position in the masonry. Traditional illustrations often depict workers using levers to maneuver the stone into place. While levering is certainly a plausible method, I wondered whether a more efficient and systematic

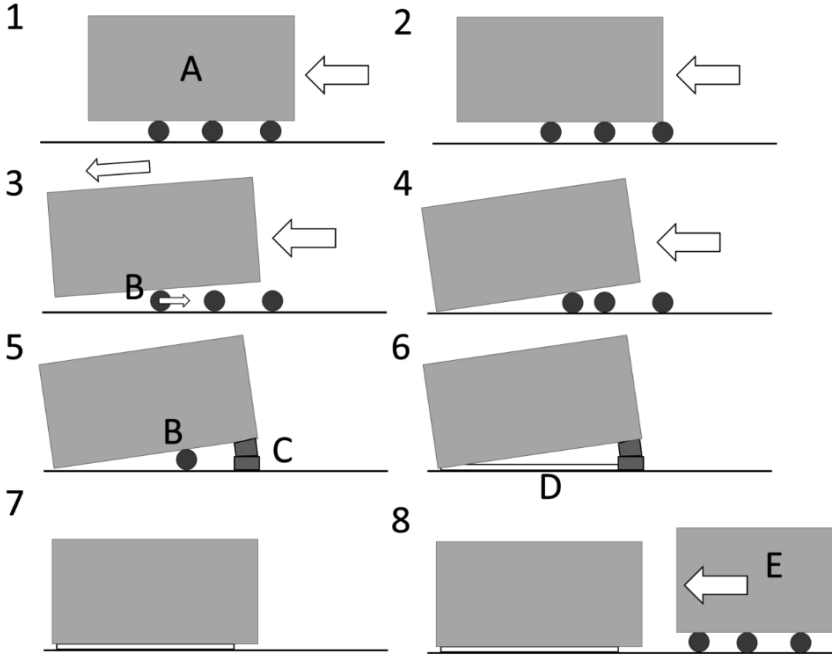

Fig. 5-19. Proposed method for placing a stone block at its designated position.

technique might have been available. This line of thought led to the concept illustrated in Fig. 5-19.

Steps 1–2

Fig. 5-19-1 shows stone block A being transported on rollers. As the block approaches its intended placement site, the workers stop adding new rollers to the front of the path, as shown in Fig. 5-19-2.

Steps 3–4

When block A is pushed forward from behind, its front edge eventually overhangs the last roller and begins to tilt downward under its own weight. As the block continues to move, it pushes the remaining roller B backward. The block finally comes to rest when its front edge contacts the ground surface directly, as illustrated in Fig. 5-19-4.

Step 5

To remove roller B from beneath the block, the workers first place a temporary support C—made of sun-dried mudbrick—under the raised rear end of the block. With the load now transferred to support C, roller B can be removed easily by tapping it lightly or shifting it with a small lever.

Steps 6–7

After removing the roller, the workers fill the gap beneath the block with mortar D, which both reduces friction and fills the joints between stones (Fig. 5-19-6). Water is then poured onto the temporary mudbrick support C.

Sun-dried mudbrick rapidly loses strength when it absorbs water. Under the weight of the block, the brick begins to crack; water penetrates these cracks, accelerating the collapse. Ultimately, the mudbrick reverts to a soft, mud-like state, as shown in Fig. 5-19-7. By adjusting the amount of water applied, workers could precisely control the rate at which the block settled into its final horizontal position. This controllability is the central advantage of the method.

Step 8

Once the block has fully settled, the mortar beneath it has not yet hardened, and friction is still low. This allows workers to perform fine

positional adjustments with minimal effort—for example, by gently pushing the block with the next incoming stone E, as shown in Fig. 5-19-8.

Whether this technique was actually used in pyramid construction cannot be known. It remains a hypothetical possibility, and because the collapse of sun-dried mudbrick leaves no archaeological trace, it is difficult to prove. Nevertheless, given that workers had to place large numbers of blocks every day, it is worth considering whether they relied solely on brute force and simple levers, or whether they developed more efficient, sustainable procedures such as the one proposed here.

8. Examination of the Ramp System of Khufu's Pyramid

To conclude this chapter on ramps, I present the model I have assumed for the ramp system of Khufu's Pyramid.

As a simplifying premise, I assumed that the external circumferential ramp ascended four courses per side of the pyramid. One full circuit would therefore raise the working level by sixteen courses. Since Khufu's Pyramid consists of 203 courses, a ramp rising sixteen courses per circuit would require approximately 12.7 circuits to reach the summit. Under this configuration, the total ramp length would be about 6.2 km.

A rise of four courses per side corresponds, for example, to a height of roughly 1.5 m on the first side. This yields a slope angle of 1.43°, or 2.5% in road-engineering terms. Although extremely gentle, such a slope is still perceptible to humans as a "mild incline" and corresponds to the gradient at which wheelchair users begin to feel increased effort.

The slope angle and total ramp length are in a trade-off relationship, but interestingly, when the ramp is constructed as a circumferential structure, the total volume of sun-dried mudbrick required remains nearly constant whether the slope is steep and short or gentle and long. This is because, as shown in the formula derived in Section 4, the required mudbrick volume does not depend on the number of circuits. With fewer circuits, the inward offset per circuit increases, resulting in a thicker ramp base, which compensates for the reduced length. Thus, the

total material requirement remains nearly unchanged.

From the standpoint of maintaining throughput and ensuring sustainable human labor, a gentle, long ramp reduces the burden on each worker and is therefore preferable.

Although a total length of 6.2 km may seem excessive, the stones were not transported by a single team over the entire distance. By dividing the transport route into multiple segments and assigning each team to a specific section, the workers would not need to traverse the full length. For example, whether four teams each transport stones over the entire 6.2 km or relay them in 1.55 km segments, the theoretical throughput remains nearly identical (excluding handover time). Considering fatigue from prolonged continuous labor, the relay method would likely be more efficient.

At a slope of 2.5%, the downslope gravitational component acting on a 3-ton block is about 75 kgf (2.5% of its weight). On level ground, assuming a rolling resistance coefficient of 0.1, moving a 3-ton block requires 300 kgf, or 150 kgf if rolling resistance is 0.05. Thus, on a 2.5% slope, the required pulling force increases only modestly—about 25% when rolling resistance is 0.1.

This calculation also shows that at a 2.5% gradient, even with an ideal rolling resistance of 0.05, the gravitational component is only half of the rolling resistance force. Therefore, a block will not spontaneously run downhill if workers stop pulling.

As discussed in Chapter 3, a worker pushing a horizontal bar can exert about 20 kgf for short periods, 15 kgf for sustained heavy labor, and 10 kgf comfortably. Under a 2.5% slope with rolling resistance between 0.05 and 0.1, moving a 3-ton block requires 225–375 kgf, meaning 20 workers could accomplish the task. Since level-ground transport required about 16 workers, the increase is minimal. With 20 workers, a transport speed of 2 km/h would likely have been achievable.

In Chapter 2, I noted that constructing Khufu's Pyramid required placing 500 blocks per day, corresponding to a throughput of one block every 1.3 minutes during an 11-hour workday. Even if this throughput

were achieved on level ground, it would be meaningless unless the same rate could be maintained on the pyramid's ramp. To avoid reducing transport speed on the slope, a gentle gradient was essential.

Conversely, if one assumes the 5% or 7% gradients proposed in traditional theories, the downslope gravitational force on a 3-ton block becomes 150 kgf at 5% and 210 kgf at 7%. With a rolling resistance of 0.05, the block would be at risk of sliding downhill uncontrollably. Preventing such runaway motion would require additional safety measures, severely degrading workability. Thus, although steeper slopes shorten the ramp, they are inferior when considering workability, safety, and long-term sustainability. A gentle slope is clearly the superior solution.